Stroke	L
100	218
150	268
200	318
250	368
300	418
400	518
500	618
600	718
700	818
800	918

Stroke	JC
0~160	95
161~250	120
251~400	165
401~630	235
631~800	285

Switch

SS-*L/Lead Type

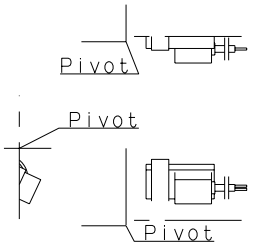

SS-*N/DIN Connector Type(NPT1/2)

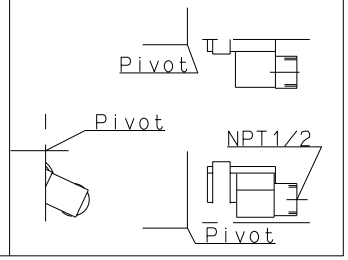

Solenoid Connection

Water tight cover(W)

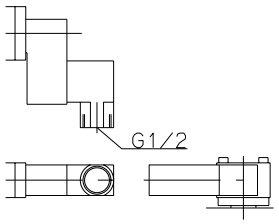

Lead Type(L)

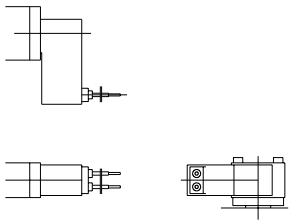

I-Type Rod Joint

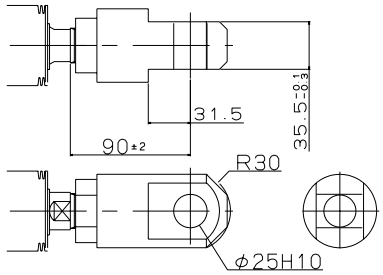

Pin

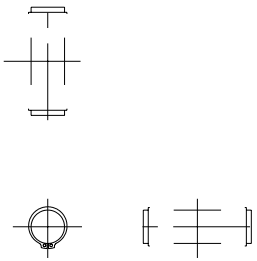

Y-Type Rod Joint

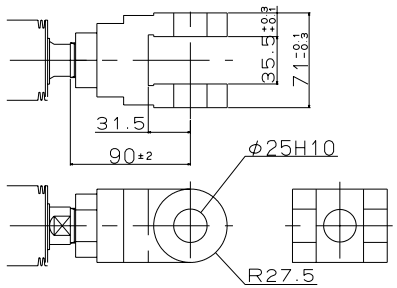

Lock Nut

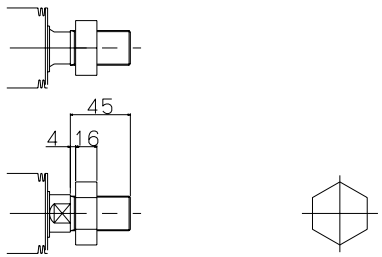

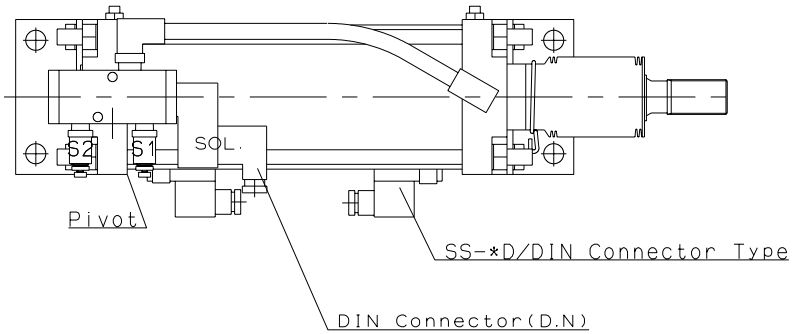

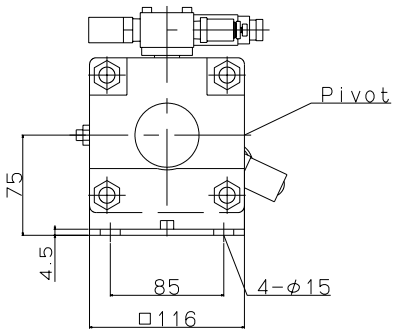

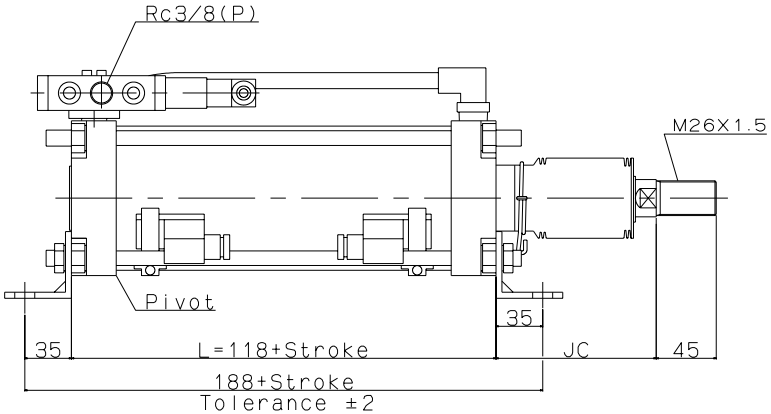

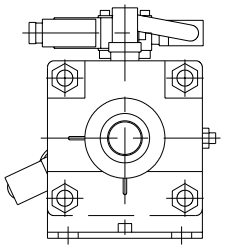

JIS Symbol

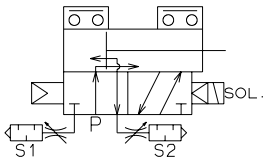

Model:
MS665-A(B)(D)-LB-100X200-HS

Maker:
KONAN

File Name:
MS66-A-LB-100-HS