Stroke	L
100	245
150	295
200	345
250	395
300	445
350	495
400	545
500	645
600	745
700	845
800	945
900	1045
1000	1145

Switch

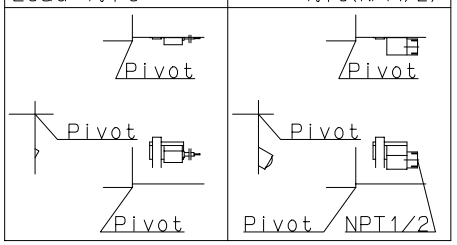

Solenoid Connection

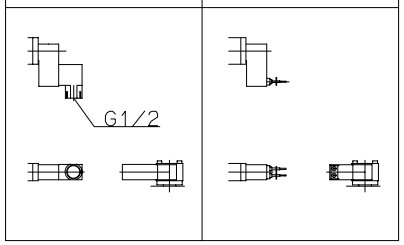

I-Type Rod Joint

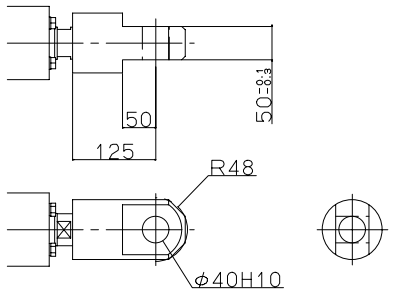

Pin

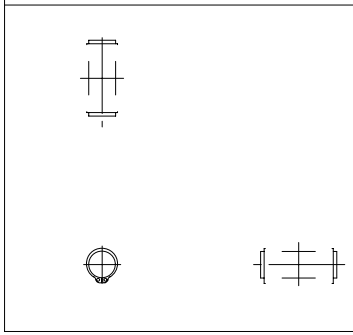

Y-Type Rod Joint

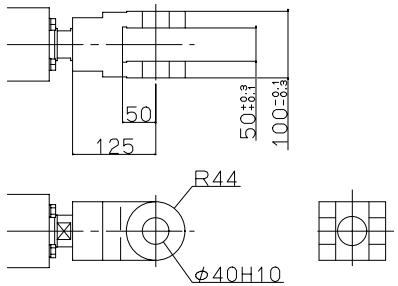

Lock Nut

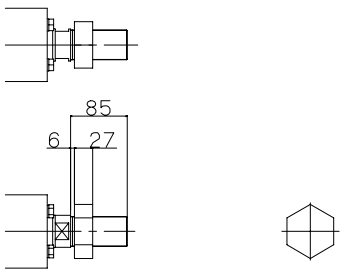

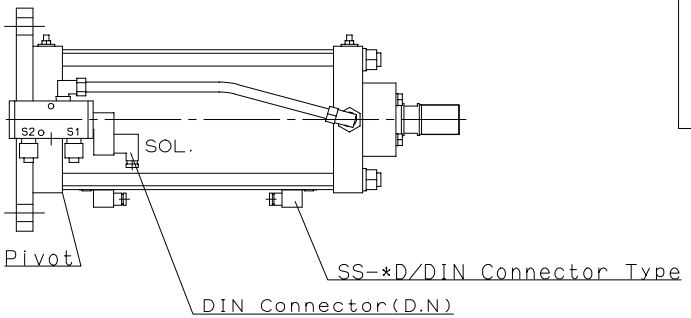

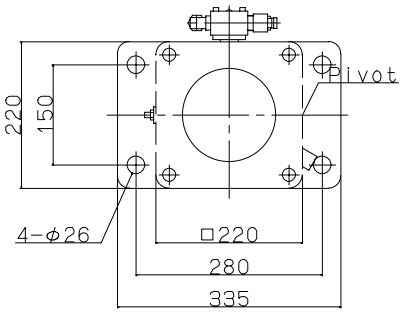

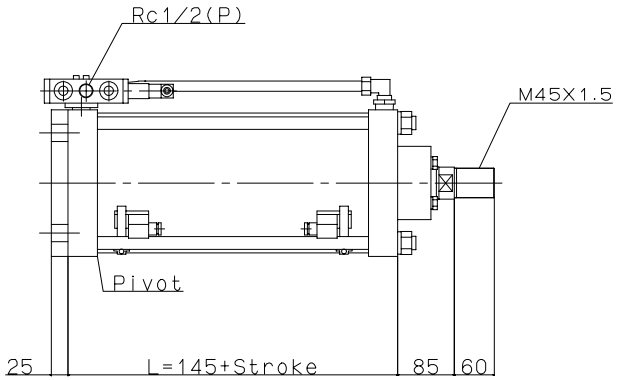

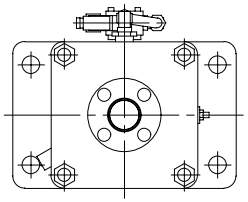

JIS Symbol

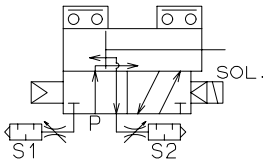

Model:
MS665-N-FB-200X350-HS

Maker:
KONAN

File Name:
MS66-N-FB-200-HS