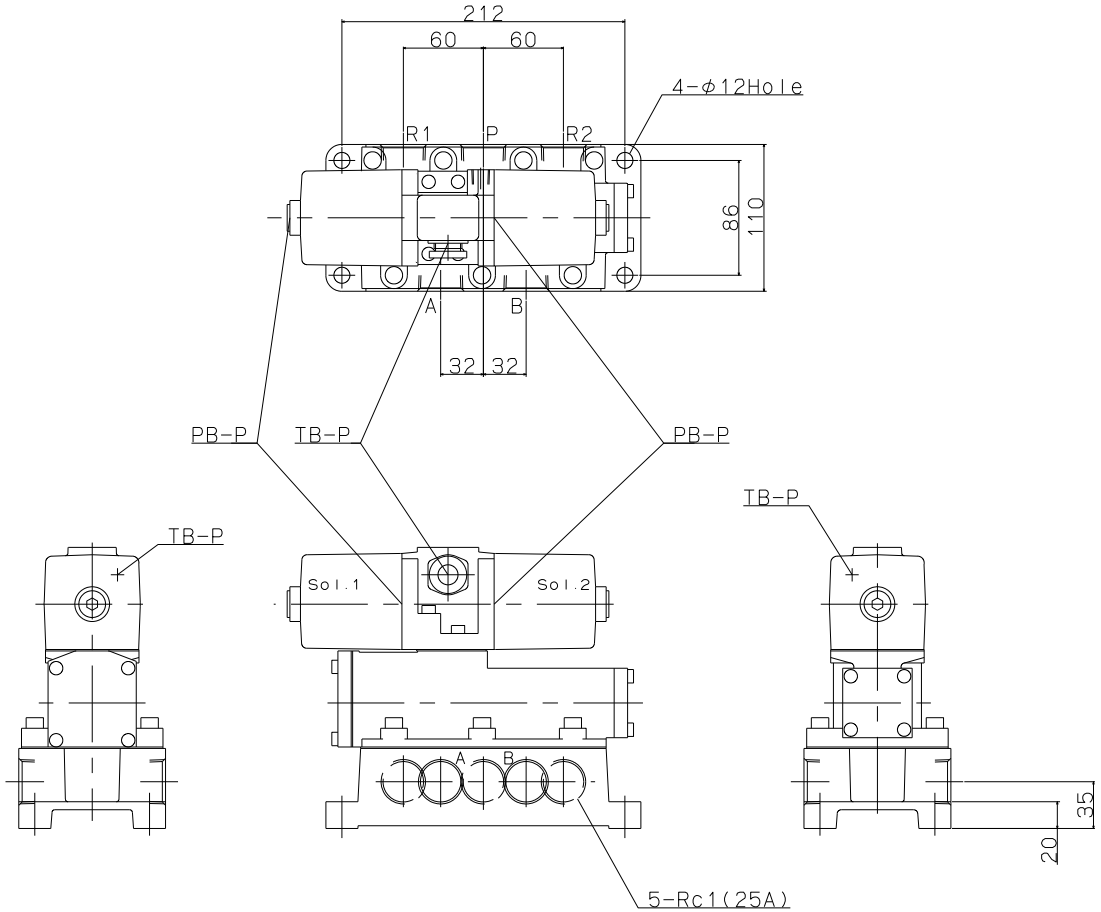

Port size	
Rc3/4(20A)	Rc1(25A)

Push Bottom (PB-P : Push Bottom Pivot)

Type "UX"

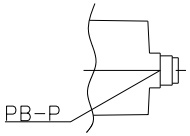

Type "WX"

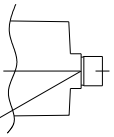

Terminal Box (TB-P : Terminal Box Pivot)

Type TB5P

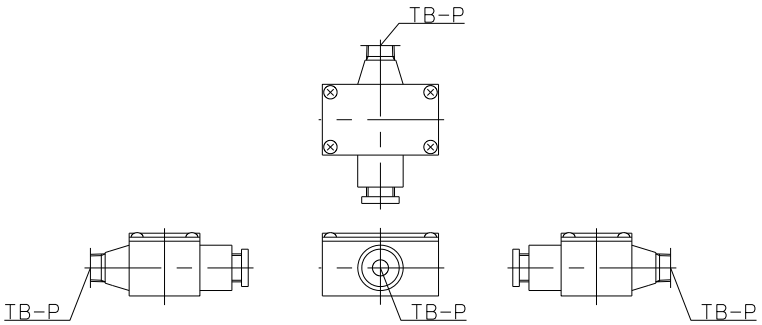

JIS Symbol	Model: MVD2-20A.25A
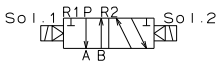	Maker: KONAN
	File Name: MVD2-25A