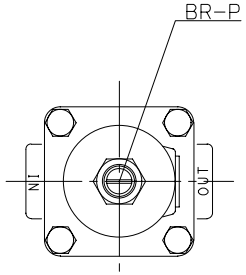

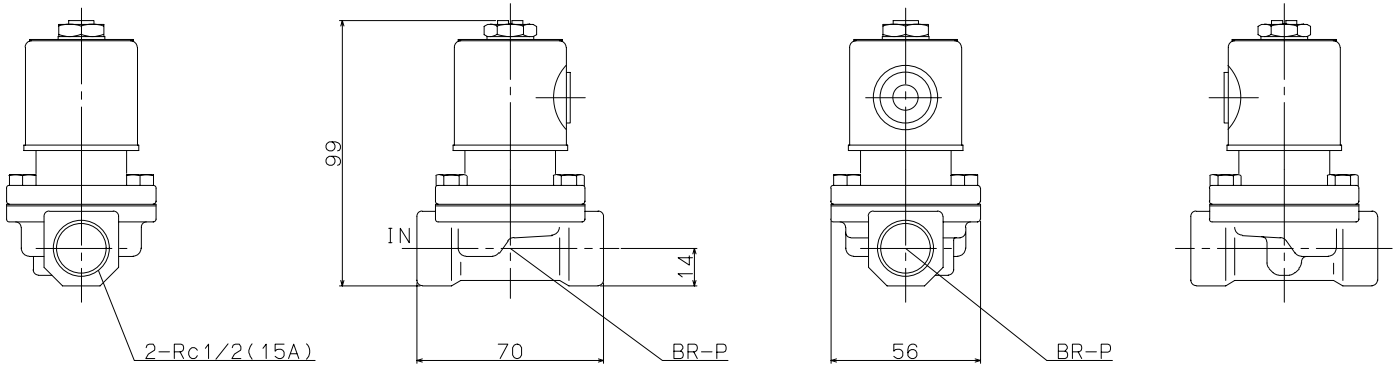

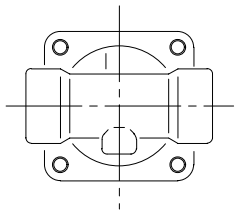

Port Size	
Rc3/8(10A)	Rc1/2(15A)

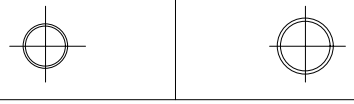

Bracket

BR-P:Bracket Pivot

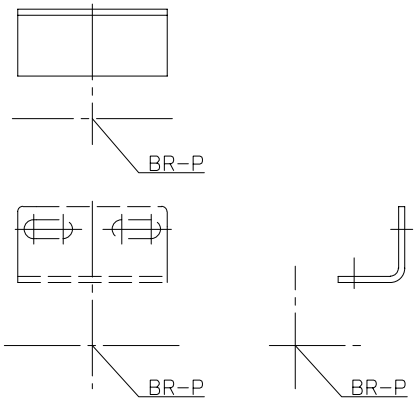

JIS Symbol

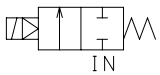

Model:

*S201B*****C**
*S201B*****D**
*S211B*****C**
*S211B*****D**

Maker:

KONAN

File Name:

YS201BD