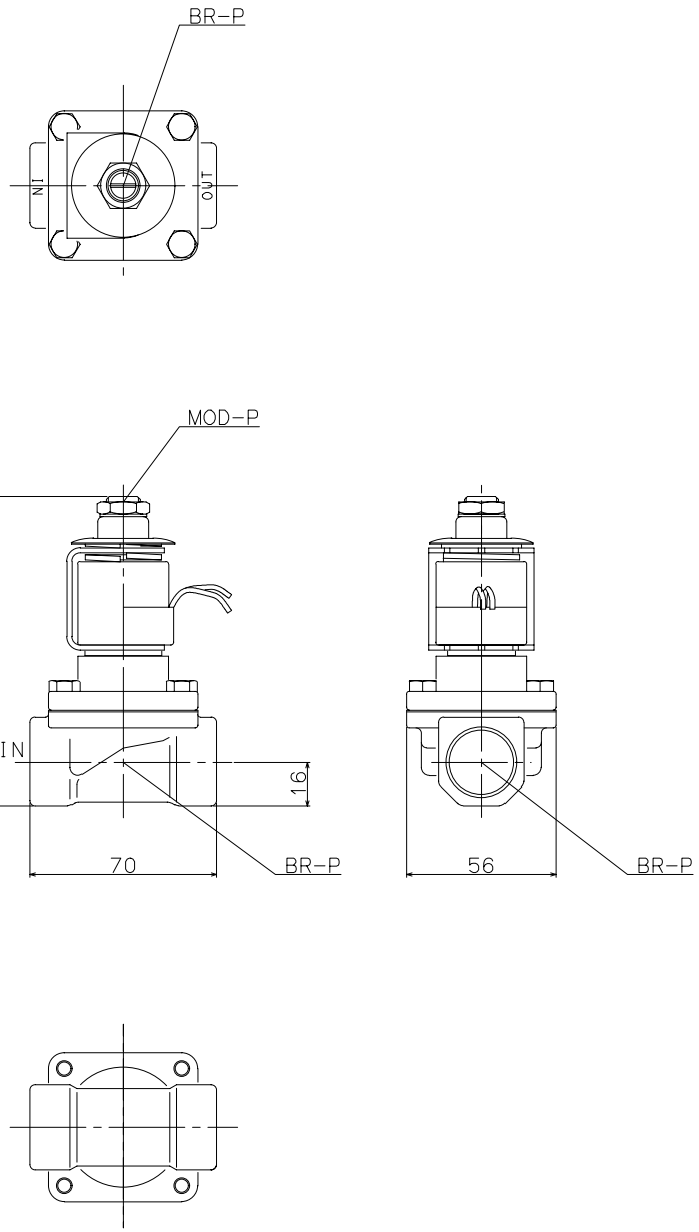

Bracket

BR-P:Bracket Pivot

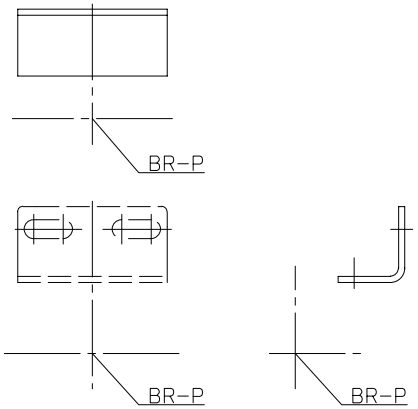

Manual Operating Device

MOD-P:Manual Operating Device Pivot

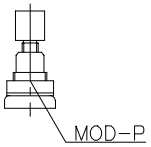

JIS Symbol

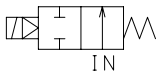

Model:

*S202P*****E**
*S212P*****E**

Maker:

KONAN

File Name:

YS202PE