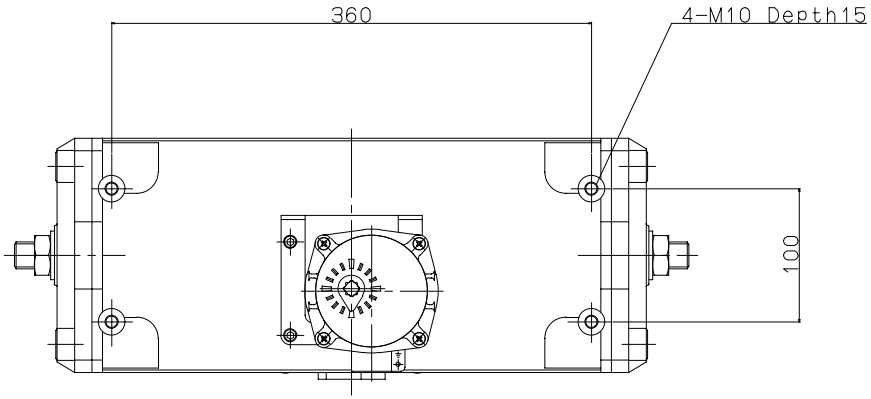

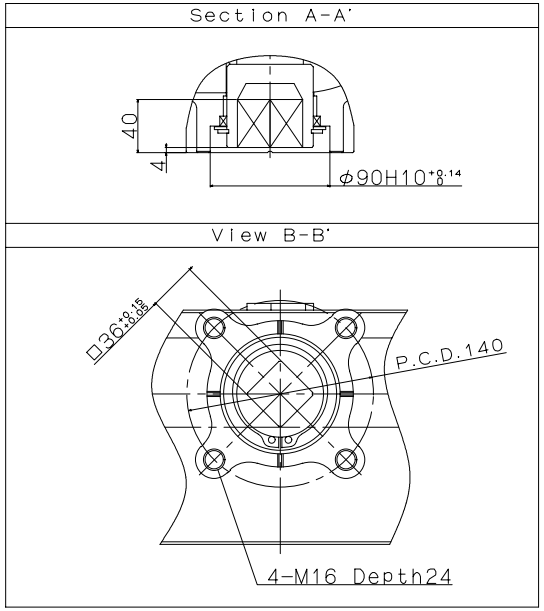

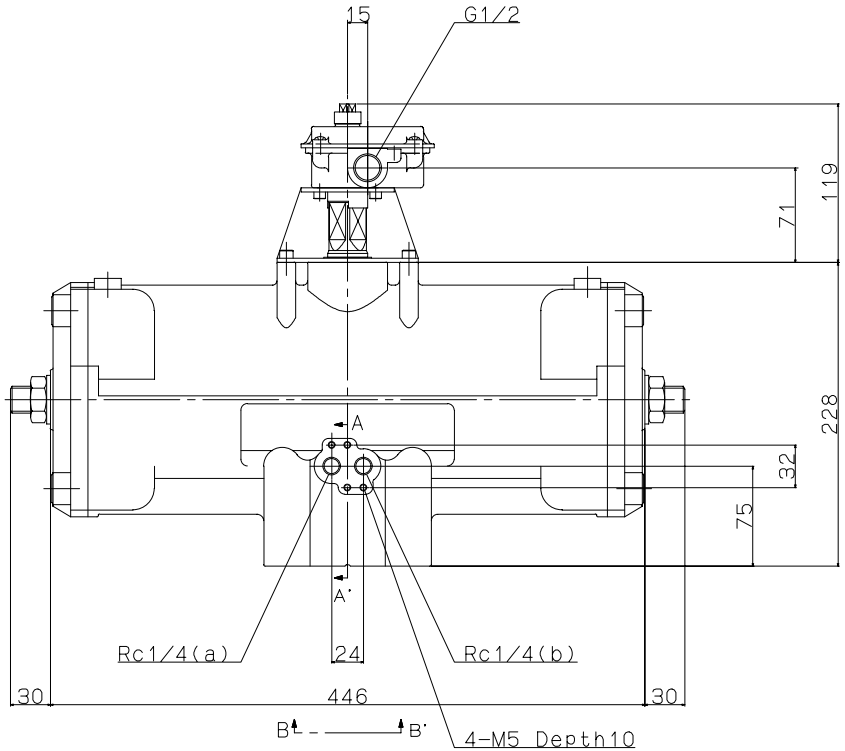

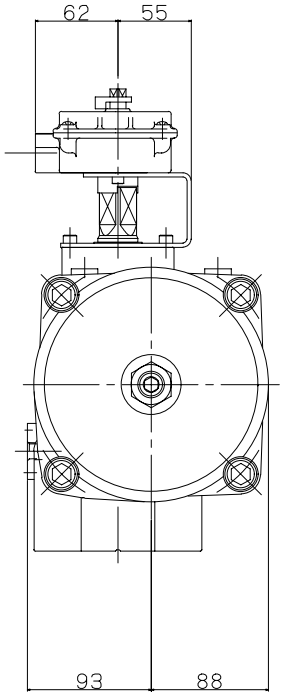

Symbol

Model:	TA2-160D-34
Maker:	KONAN
File Name:	TA2-160D-34